PASSIVE HARMONIC FILTERING SOLUTIONS FOR POWER CONVERTERS





Contents

Passive Harmonic Filtering Solutions	5
Main Features / Considerations	6
LRZ / LRBZ: AC Line Reactors for Harmonic Mitigation	7
AC Line Reactors for Power Converters (Specifications)	8
LLC: Low-pass Passive Harmonic Filters	9
Low-pass Harmonic Filters for Power Converters (Specifications)	10



Passive Harmonic Filtering Solutions



The increasing use of nonlinear, unbalanced, variable and other challenging loads and generators in electric power systems presents unique problems and challenges. Power quality issues caused by power converters, such as harmonic distortion, can produce adverse effects on the electrical system and connected equipment when they exceed certain acceptable limits.

Circutor provides passive harmonic filtering solutions for power conversion equipment that is using rectifiers or inverters, such as variable speed drives (VSD), UPS systems, battery chargers and other AC/DC loads. These solutions help to smooth current flow to power converters, mitigate harmonic distortion, and enhance the protection and reliability of the converters' power semiconductors.

Main features

Provide moderate reduction of voltage and current harmonics

Protect power converters against line transients

Simple and robust design. No active components or control electronics required

No external power supply required. They operate without auxiliary power, making it suitable for harsh or constrained environments.

Considerations

May not always reduce harmonic levels below the limits required by power quality standards.

Performance depends on system stability. Best suited for applications with predictable and steady load condition.

Fixed tuning frequency. Optimized for specific harmonic orders; any changes in the network may affect the filtering performance.

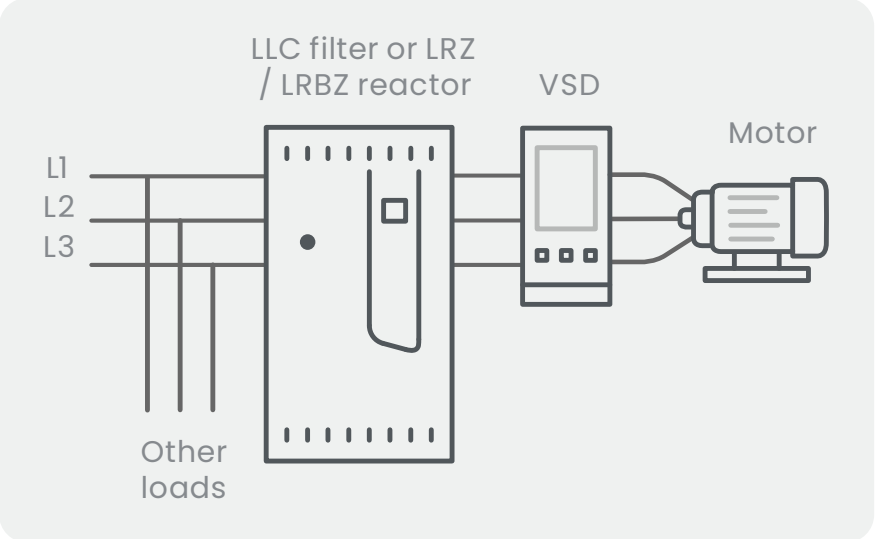

LRZ/LRBZ: AC line reactors for harmonic mitigation

AC line reactors for harmonic mitigation

AC line reactors, also known as AC line chokes, are a simple and reliable solution to improve the electrical performance of power converters. Installed in series on the grid side, they help reduce harmonic current distortion, attenuate voltage spikes and limit short-circuit currents, contributing to improved power quality and enhanced protection of power electronic components.

They are available with a standard 4% impedance level and can also be manufactured with custom values to meet specific project requirements. AC line reactors allow harmonic mitigation to be adapted to application needs. Depending on system conditions and load characteristics, they can reduce total harmonic current distortion (THDi%) from 40–50% to around 20%, making them an effective first step in a harmonic mitigation.



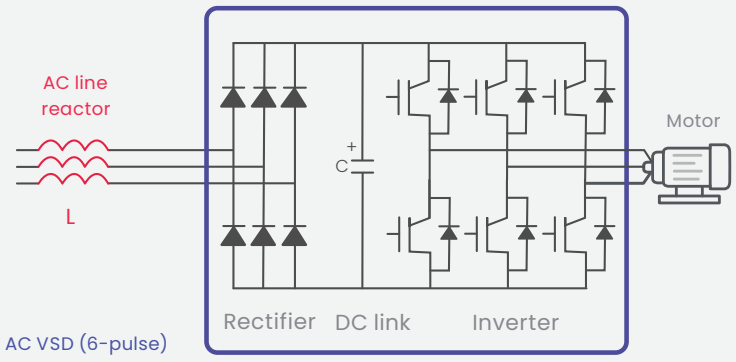

AC line reactor connection to a 6-pulse variable speed drive

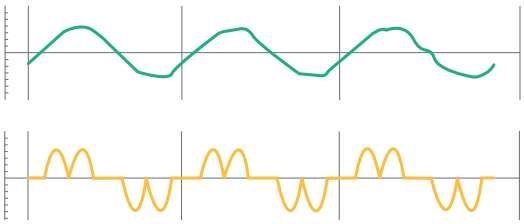

Without reactor: THD = 45%

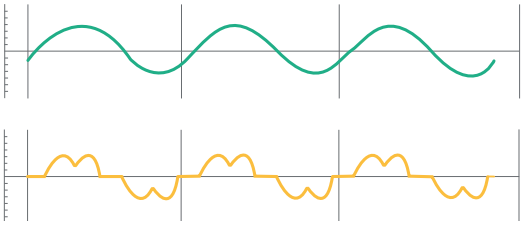

With reactor: THD = 20%

AC line reactors for power converters (Grid side, 50 Hz)

Code	In(A)	Motor P. (kW / CV)	L (mH)	Weight (kg)	Size (mm) WxHxD	Type
[2] P73309.	32	15 / 20	0,98	4,3	150x152x90	LRBZ 04-033
[2] P7330B.	47	22 / 30	0,67	9,1	180x197x110	LRZ 04-050
[2] P7330D.	64	30 / 41	0,49	11	180x197x120	LRZ 04-066
[2] P7330E.	76	37 / 50	0,4	12,5	180x160x135	LRBZ 04-080
[2] P7330F.	90	45 / 62	0,34	18	237x195x131	LRBZ 04-095
[2] P7330G.	110	55 / 75	0,28	21	237x195x131	LRBZ 04-115
[2] P7330H.	148	75 / 102	0,2	26	237x195x131	LRBZ 04-150
[C] P7330J.	180	90 / 122	0,17	32	242x256x154	LRBZ 04-185
[C] P7330K.	200	110 / 150	0,15	37	245x256x154	LRBZ 04-200
[C] P7330L.	250	132 / 180	0,12	44	280x300x164	LRBZ 04-250
[C] P7330M.	300	160 / 220	0,1	48	280x300x164	LRBZ 04-300
[C] P7330N.	400	200 / 273	0,07	72	320x350x208	LRBZ 04-400
[C] P7330P.	500	250 /341	0,06	80	320x350x228	LRBZ 04-500
[C] P7330R.	600	315 / 430	0,05	105	385x505x320	LRBZ 04-600

Other configurations can be supplied under demand. The dimensions can change according to specifications.

Key benefits

- Cost-effective solution for reducing harmonic current distortion in power converters
- Limits short-circuit currents and inrush phenomena
- Attenuates voltage peaks and transients on the supply network ensuring stable operation conditions.

Application considerations

- Harmonic mitigation depends on the selected impedance value and load characteristics
- AC line reactors provide partial harmonic reduction and do not target specific harmonic orders
- They may not be sufficient on their own to meet strict harmonic limits in demanding installations.

LLC: Low-pass passive harmonic filters

Low-pass passive harmonic filters

Low-pass passive harmonic filters are installed at the input (grid side) of power converters and are designed to reduce the current harmonics generated by these loads. They consist of a shunt combination of reactors and capacitors, engineered to attenuate harmonic currents and typically reduce THDi% to values below 10%.

The result is improved voltage quality at the grid side of the filter by reducing harmonic currents and mitigating voltage transients associated with power electronics switching.

The performance of these filters is influenced by source and load impedances, and they may absorb harmonics from other sources, making proper system analysis and design essential.



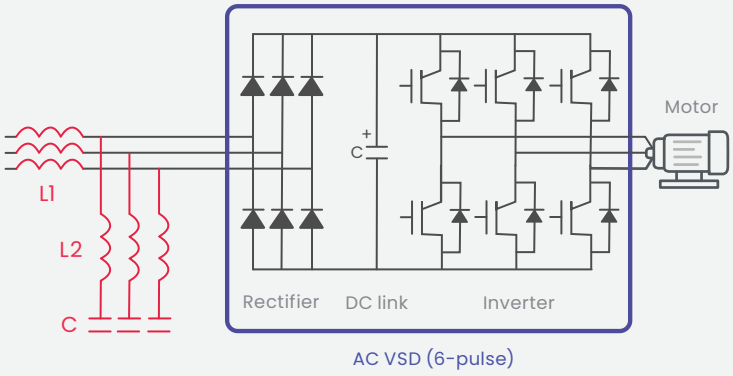

Low-pass passive harmonic filter connection to a 6-pulse variable speed drive.

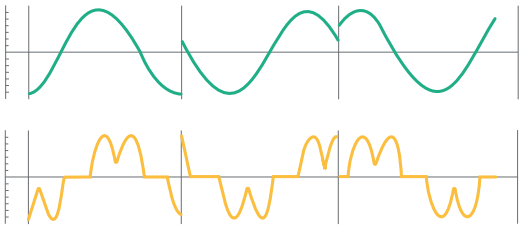

Without filter: THD (I) = 35% / 50%

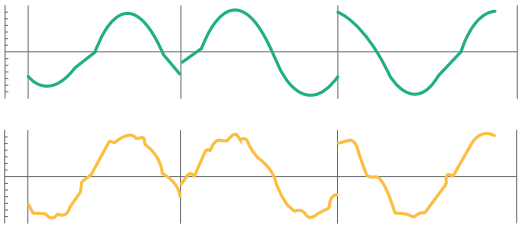

With reactor: THD (I) = <5%

Low-pass harmonic filters for power converters

Code	Max.Line current (A)	Cap.power (kvarC)	IP degree	Size (mm) WxHxD	Type
R7341600TB000	110	9,5	IP 21/NEMA 1	2000 x 900 x 650	R7341600TB000
R7341700TB000	150	13	IP 21/NEMA 1	2000 x 900 x 650	R7341700TB000
R7341800TB000	180	15	IP 21/NEMA 1	2000 x 900 x 650	R7341800TB000
R7341900TB000	220	18	IP 21/NEMA 1	2000 x 900 x 650	R7341900TB000
R7342000TB000	260	21	IP 21/NEMA 1	2000 x 900 x 650	R7342000TB000
R7342100TB000	320	25	IP 21/NEMA 1	2000 x 1200 x 650	R7342100TB000
R7342200TB000	400	33	IP 21/NEMA 1	2000 x 1200 x 650	R7342200TB000

Other current values can be manufactured under project specifications. (9A, 16A, 22A, 32A, 40A, 47A, 64A, 54A, 76A, 90A)

Key benefits

- Significant reduction of current harmonics (THDi < 10%)
- Improved voltage quality at the grid side, thanks to effective attenuation of harmonic currents
- Mitigation of voltage surges associated with thyristor commutation processes
- Higher performance than AC line reactors.

Application considerations

- Filter performance is influenced by source and load impedance variations
- LLC filters can interact with the electrical network and may attract harmonics generated by other loads
- Careful system analysis and proper design are essential to avoid resonance or undesired harmonic amplification.



Partnering with

Circutor

Leading electrical energy efficiency company, creating innovative technological solutions for our clients, in the field of global energy transition since our foundation in 1973.

circutor.com

1300 556 601
customerservice@ipd.com.au
ipd.com.au